IMPORTANT NOTICE - READ CAREFULLY

72600M Series Pressure Reducing Valve (PRV) - No-Lead

- Flush dirt and scale from water supply pipe.
- Install the Pressure Reducing Valves (PRV) vertically or horizontally (upright or inverted), but the PRV must be installed with the arrow in the direction of flow.
- The valve is preset at 50 PSI. To adjust, loosen Lock Nut (2) and turn Adjustment Bolt (1) clockwise to increase, and counterclockwise to decrease.
- This PRV has a built-in Thermal Expansion Bypass. If the inlet pressure is higher than the discharge setting of the water heater (typically 150 PSI) or if there is a check valve or backflow preventer installed on the line, you must make provisions for pressure relief protection to protect your plumbing system and its components.
- Should be installed in an accessible location.

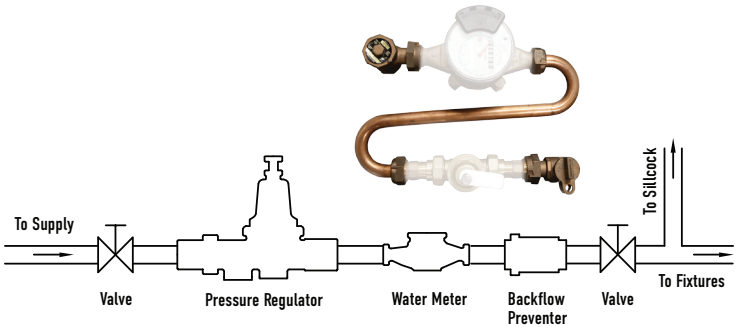

Warning: Conduct a thorough inspection of the valve for external leaks after the "final" installation and setting of the PRV.

Maintenance Instructions

- To Clean Strainer: Shut off water supply, remove Strainer Cap (28), then remove and clean Strainer (18).
- When reassembling, apply a drop of low strength thread lock to the disc holder.

*** Inspect all water system safety and control valves annually.

- ASSE 1003-2020
- NSF / ANSI 372/61-2020

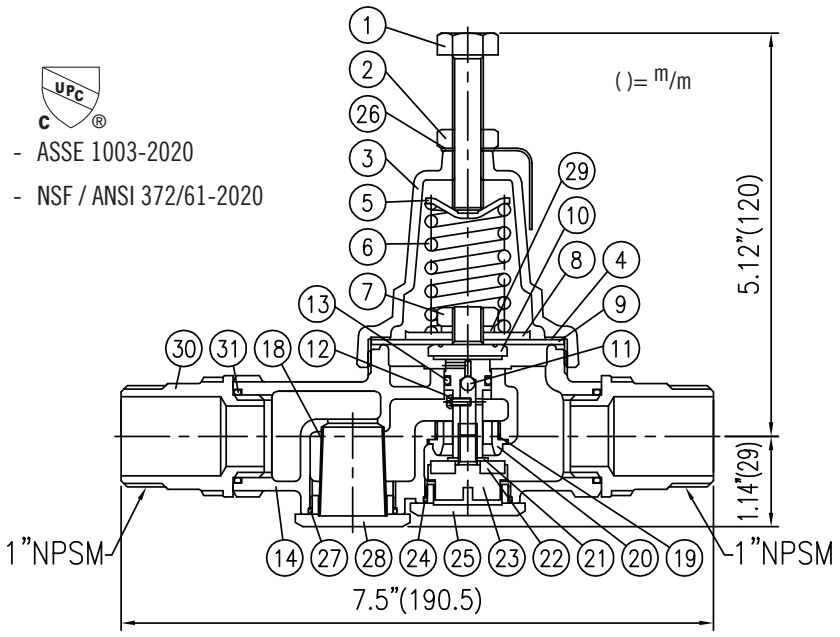

No.	Part	Pcs	Material
1	Adjustment Bolt	1	ASTM A283-D JIS SS400 OR ASTM S/S304 JIS SUS304
2	Lock Nut	1	AISI-1010 JIS S10C OR ASTM S/S304 JIS SUS304
3	Bonnet	1	ASTM B584-C85700 JIS H5120-CAC203
4	Friction Ring	1	ASTM S/S304 JIS SUS304
5	Spring Disc	1	ASTM A283-D JIS SS400
6	Spring	1	ASTM A227M JIS SWRH52
7	Diaphragm Nut	1	AISI-1010 JIS S10C
8	Diaphragm Disc	1	ASTM A283-D JIS SS400
9	Diaphragm	1	EPDM+NYLON
10	Stem	1	ASTM C46400
11	Rubber Ball	1	EPDM
12	Rubber Ball Screw	1	ASTM S/S304 JIS SUS304
13	Stem O-Ring	1	EPDM
14	Body	1	JIS H5120-CAC804
18	Strainer	1	ASTM S/S304 JIS SUS304
19	Seat O-Ring	1	EPDM
20	Seat	1	ASTM S/S304 JIS SUS304
21	Plunger Washer	1	ASTM S/S304 JIS SUS304
22	Plunger Packing	1	EPDM
23	Plunger	1	ASTM C46400
24	Cap O-Ring	1	EPDM
25	Cap	1	ASTM C46400
26	Name Plate	1	ASTM B209-1100 JIS H4000-A1100P
27	Strainer Cap O-Ring	1	EPDM
28	Strainer Cap	1	ASTM C46400
29	Spring Washer	1	ASTM A227M JIS SWRH52
30	NPSM Union Adapter	2	ASTM C46400
31	Union Adapter O-Ring	2	EPDM

WARNING: It is unlawful in **CALIFORNIA & VERMONT (effective 1/1/2010); MARYLAND (effective 1/1/2012); LOUISIANA (effective 1/1/2013) and the UNITED STATES OF AMERICA (effective 1/4/2014)** to use any product in the installation or repair of any public water system or any plumbing in a facility or system that provides water for human consumption if the wetted surface area of the product has a weighted average lead content greater than 0.25%. This prohibition does not extend to service saddles used in California, Louisiana or under USA Public Law 111-380.